ADVANCE STORAGE PRODUCTS
A Division of J.C.M. Industries, Inc.
Huntington Beach, CA 92649 (714) 902-9000 Fax: (714) 902-9001

THIS DOCUMENT CONTAINS PROPRIETARY MATERIAL AND/OR INFORMATION WHICH IS OWNED BY ADVANCE STORAGE PRODUCTS, AND WHICH IS GIVEN IN CONFIDENCE. THE PARTY ACCEPTING THIS DOCUMENT ASSUMES CUSTODY THEREOF AND AGREES NOT TO REPRODUCE, TO USE IN ANY WAY INCLUDING MANUFACTURING, OR TO DIVULGE TO A THIRD PARTY THE DOCUMENT OR DETAILS HEREIN WITHOUT EXPRESS WRITTEN PERMISSION FROM ADVANCE.

4 Deep Lo-Pro Pushback System

WHEEL LEGEND			
F		8	TAPPED FLAT WHEEL (1-3/8" STUD) (FOR USE ON CARTS 1 & 2)
E		2	FLAT WHEEL (2.1" STUD) (FOR USE ON CART 3)
D		2	FLANGED WHEEL (2.1" STUD) (FOR USE ON CART 3)

WHEELS MUST BE TORQUED BTWN. 30-40 Ft. lb.
- OVER TORQUE WILL CAUSE WHEELS TO CRACK
- UNDER TORQUE WILL CAUSE WHEELS TO FALL OFF

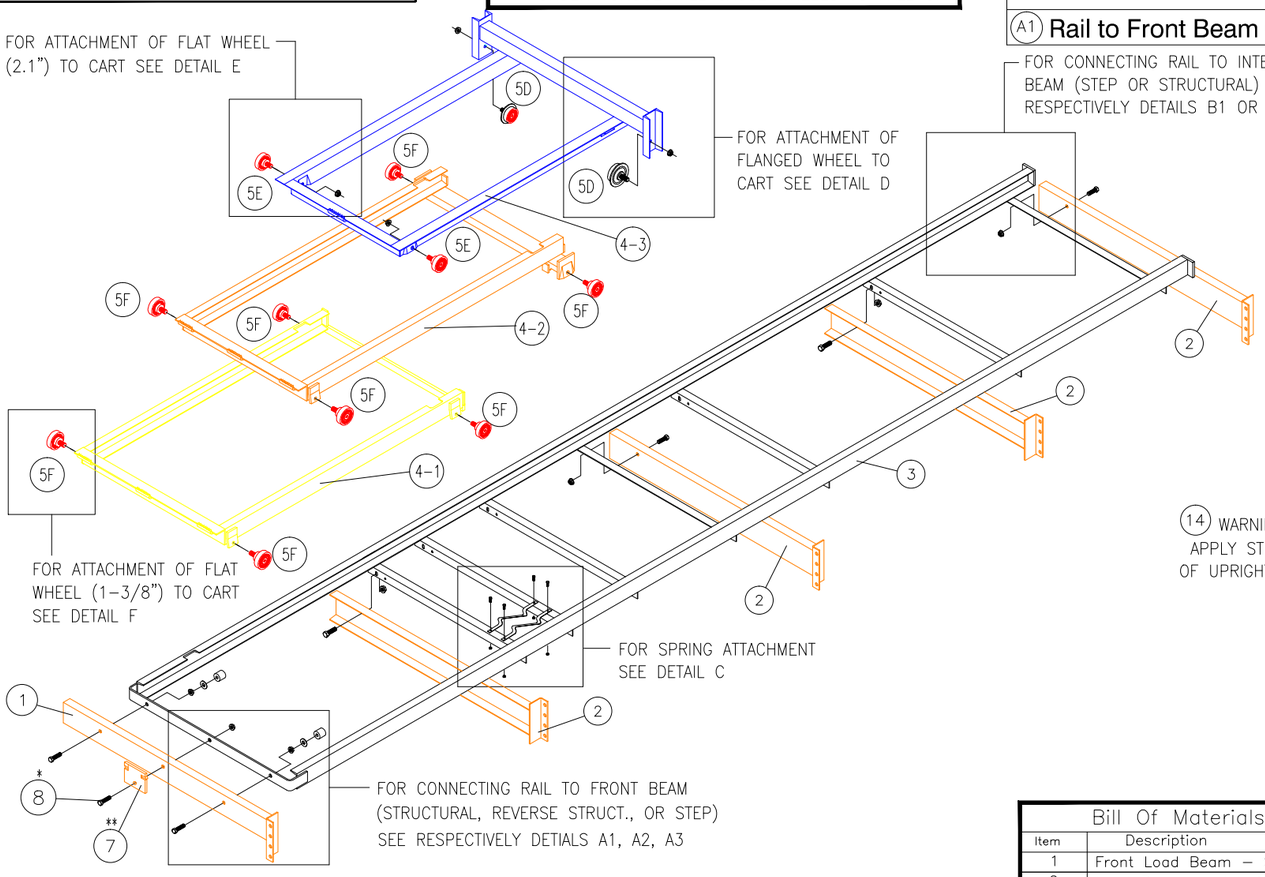

CENTER BOLT IS NOT REQUIRED UNLESS PALLET STOP IS USED.

* NOTE: HARDWARE ONLY INCLUDED AS PART OF OPTIONAL PALLET STOP KIT.

** NOTE: IF ORDERED, OPTIONAL PALLET STOP WILL EXTEND ABOVE FRONT BEAM APPROXIMATELY 1"

NOTE: ALL CARTS WILL HAVE WELDED ON SERRATED PALLET STOPS

NOTE: BEAM CONFIGURATION AND BOM ARE REPRESENTATIVE, CHECK ENGINEERING/APPROVAL DRAWING FOR EXACT CONFIGURATION. INTERIOR AND REAR BEAMS ARE ONLY PUNCHED WITH ONE HOLE PER LANE FOR PUSHBACK CONNECTION.

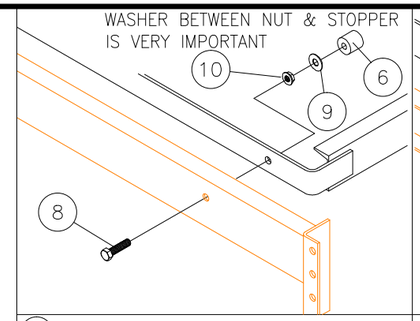

A1 Rail to Front Beam Connection

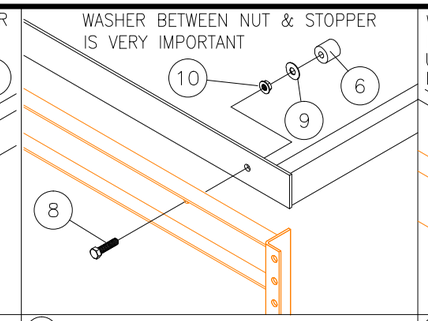

A2 Rail to Front Reverse Beam Con.

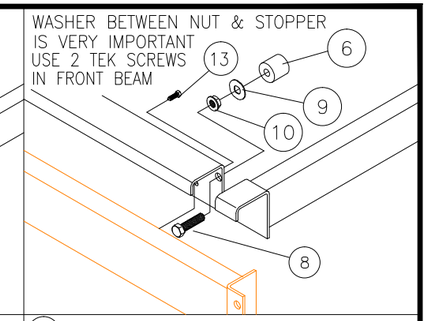

A3 Rail to Front Step Beam Connection

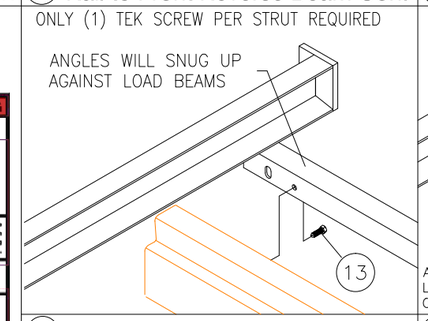

B1 Rail to Interior Step Beam Connection

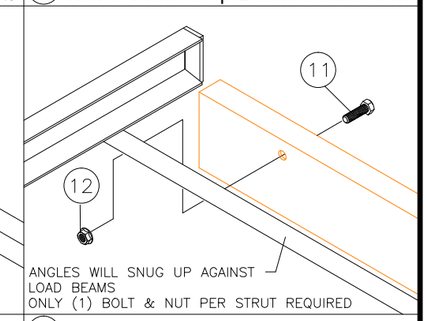

B2 Rail to Interior Struct. Beam Connection

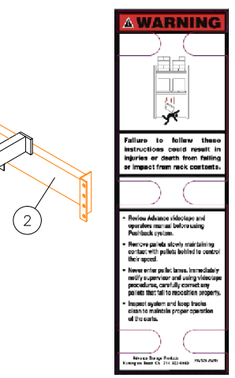

14 WARNING STICKER
APPLY STICKER TO FACE OF UPRIGHT AT EYE LEVEL.

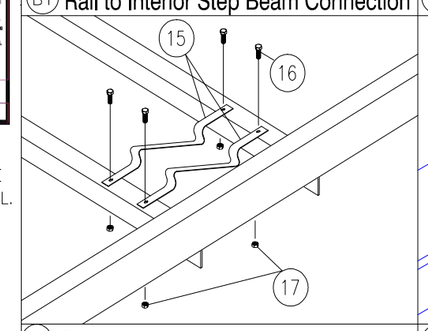

C Spring Attachment - 4Deep

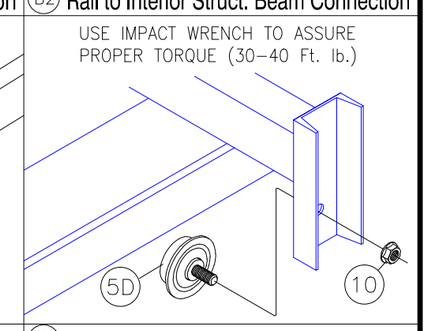

D Flanged Wheel to Cart Attachment

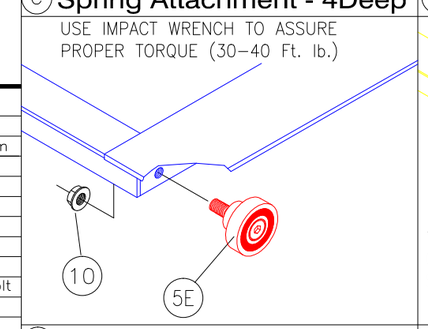

E Flat Wheel to Cart Attachment

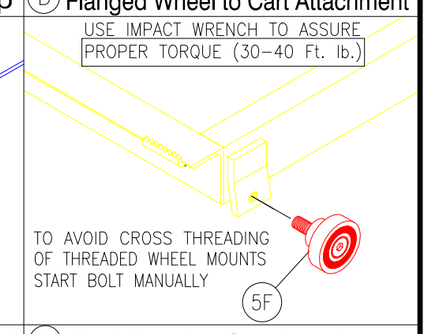

F Flat Wheel to Cart Attachment

Bill Of Materials

Item	Description
1	Front Load Beam – Structural Beam
2	Load Beams – Interior & Rear
3	Welded Frame Pushback Rail
4-1,2,3	Pushback Carts
5 D,E,F	Pushback Wheels
6	Rubber Stopper – 1-5/16"
7	Bolt-on Pallet Stop
8	1/2"-13 x 1-3/4" Lg. Tap Hex Bolt
9	1/2" USS Flat Washer
10	1/2"-13 Hex Flange Nut
11	3/8"-16 x 1" Lg. Tap Hex Bolt
12	3/8"-16 Hex Flange Nut
13	#14 x 1" Washer HD Hex Tek Screw
14	Warning Sticker
15	Pushback Springs
16	1/4"-20 x 3/4" Lg. Tap Hex Bolt
17	1/4"-20 Ny-Lock Nut

CDL4I-D 8/12/05

REV.	REVISIONS	DATE	BY

ADVANCE STORAGE PRODUCTS
A Division of J.C.M. Industries, Inc.
Huntington Beach, California 92649 (714) 902-9000 FAX: (714) 902-9001

THIS DOCUMENT CONTAINS PROPRIETARY MATERIAL AND/OR INFORMATION WHICH IS OWNED BY ADVANCE STORAGE PRODUCTS, AND WHICH IS GIVEN IN CONFIDENCE. THE PARTY ACCEPTING THIS DOCUMENT ASSUMES CUSTODY THEREOF AND AGREES NOT TO REPRODUCE, TO USE IN ANY WAY INCLUDING MANUFACTURING, OR TO DIVULGE TO A THIRD PARTY THE DOCUMENT OR DETAILS HEREIN WITHOUT EXPRESS WRITTEN PERMISSION FROM ADVANCE.

PROJECT: 4 DEEP PUSHBACK INSTALLATION INSTRUCTIONS

PREPARED FOR: ADVANCE STORAGE PRODUCTS HUNTINGTON BEACH, CA

ADVANCE STORAGE PRODUCTS A Division of J.C.M. Industries, Inc.

DRAWN BY:	R. LIN	DATE:	10/29/09
CHECKED BY:		DATE:	
APPROVED BY:		DATE:	
FILE:	H:\PJOBS\P9XXX\SAMPLE		
SCALE:	NONE		
DRAWING NUMBER	P9XXX-3	SHEET 3.1	REVISION -